DATA SHEET

HAARSLEV INDUSTRIES

PB 22/66 Crusher

The PB 22/66 Crusher is designed for the efficient crushing of whole carcasses (maximum size 200 kg) and animal by-products into 30 mm particles on one side. The crushed material can easily be transported in screw conveyors, pumps or blow vessels, which makes the cooking process more efficient.

Advantages

The PB 22/66 Crusher is designed for a long working life with a minimum of maintenance.

- Highly wear resistant knives
- Low energy consumption
- Efficient design
- Inlet and outlet chutes can be delivered to suit your requirements

The design of the crusher knives ensures that the raw material is crushed into particles with a maximum size of 30 mm on one side.

Haarslev Industries

Haarslev Industries is one of the world's leading companies within handling and processing of by-products from food-related industries.

Since 2003, Haarslev Industries has integrated the famous range of pre-breakers and crushers of Sværtek. The Sværtek brand is recognised world-wide for outstanding quality and reliability.

Technical Description

- Rotating knives and anvils are hard faced on all cutting edges.
- Shaft passage at end walls is provided with stuffing boxes as standard.
- Electronic speed monitor can be fitted to the drive, will instantaneously shut off the motor in case of large pieces of metal entering the pre-breaker.
- Removable counter flanges fitted to the inlet and outlet as standard.
- The design of the main bearing houses of the breaker shaft allows quick maintenance and replacement of breaker shaft.
- All wear parts are available from stock.
- Inlet hopper and supports are made to measure upon request.
- Electric panel complete with controls and motor starter is available upon request.

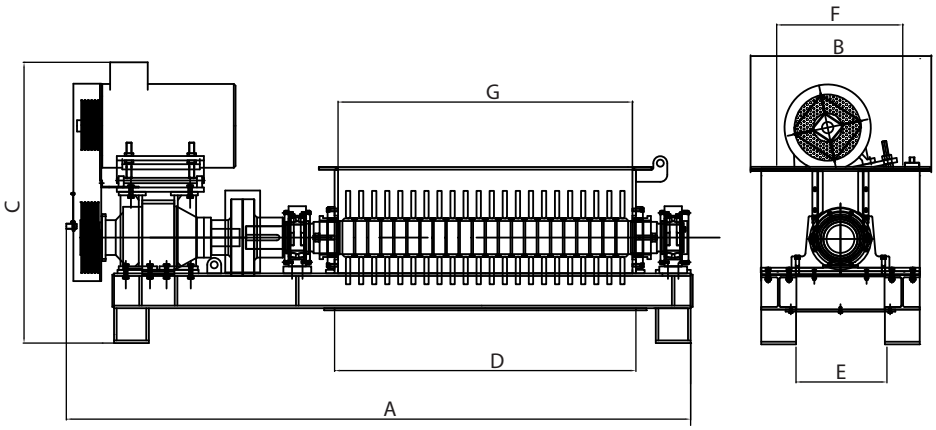

Technical Specifications		Unit	Type PB22/66
Capacity		t/h	5 - 25
Gap between anvils		mm	30
Dimensions	A	mm	3650
	B	mm	1030
	C	mm	1650
Outlet	D	mm	1720
	E	mm	510
Inlet	F	mm	880
	G	mm	1690
Power/motor		kW	37 - 75
Approx. weight		kg	4700

We reserve the right to alter the specifications at any time without prior notice.

HAARSLEV INDUSTRIES

Haarslev Industries A/S • Bogensevej 85
DK-5471 Sonderso • Denmark
Telephone: +45 63 83 11 00
E-mail: info@haarslev.com
www.haarslev.com

1026_1502